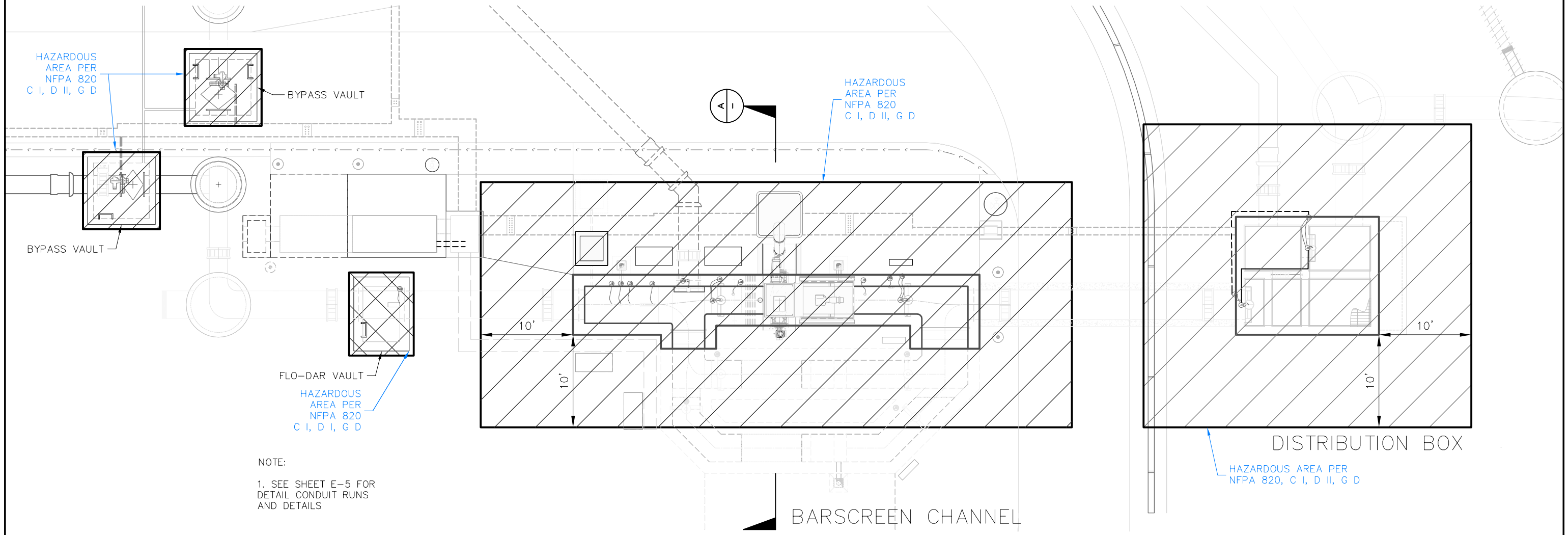

NOTE:

1. SEE SHEET E-5 FOR DETAIL CONDUIT RUNS AND DETAILS

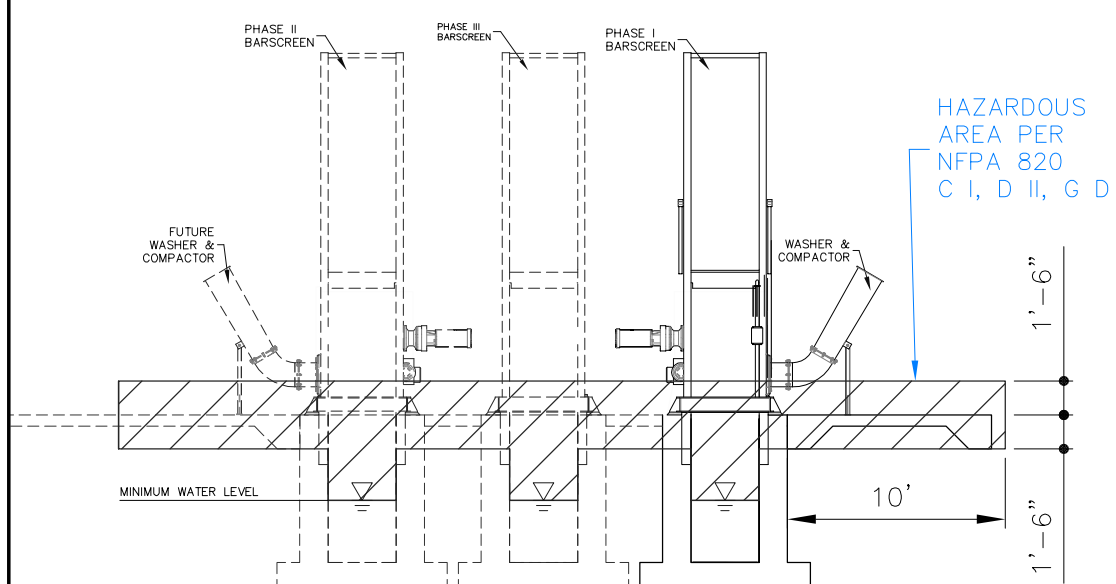

PHASE I AND II - SECTION

SCALE 1/4"=1'-0"

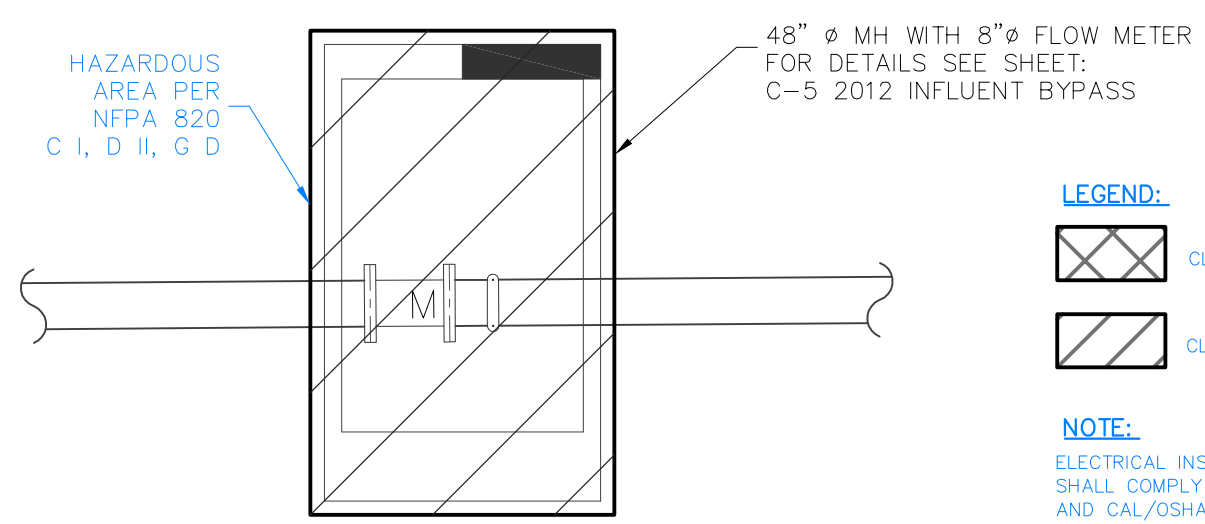

48"Ø MANHOLE WITH 8" FM FLOW METER - SECTION

N.T.S

LEGEND:

CLASS I, DIVISION I, GROUP D HAZARDOUS AREA

CLASS I, DIVISION II, GROUP D HAZARDOUS AREA

NOTE:

ELECTRICAL INSTALLATIONS IN HAZARDOUS AREA SHALL COMPLY WITH NFPA 820, NFPA 70 (NEC) AND CAL/OSHA SAFETY ORDERS (TITLE 8, CCR).

0 5 10 15

Scale: 1" = 5'

ADDENDUM # 10

Underground Service Alert
Call: TOLL FREE
1-800-227-2600
TWO WORKING DAYS BEFORE YOU DIG

The private engineer signing these plans is responsible for the accuracy and acceptability of the design hereon. In the event of discrepancies arising after city approval or during construction, the private engineer shall be responsible for determining an acceptable solution and revising the plans for approval by the city.

DATE	BY	MARK	REVISIONS	APPR.	DATE
ENGINEER				CITY	

DESIGNED BY: AJAI DRAWN BY: AJAI/RGC CHECKED BY: GAR

RECOMMENDED FOR APPROVAL
ZR
DATE
CHECKED BY: GAR
DATE

SEAL
REGISTERED PROFESSIONAL ENGINEER GREGORY ALLEN RUSSELL NO E11058 Exp.6-30-13 ELECTRICAL STATE OF CALIFORNIA

APPROVED BY DATE
CONSULTING ENGINEER

Urban Logic Consultants
43517 Ridge Park Drive, Suite 200
Temecula, California 92590
Tel.: (951) 676-1944 Fax (951) 676-2054

SCALE: AS NOTED
DATE: 09-14-2012
BENCHMARK
SEE TITLE SHEET

CITY OF BEAUMONT
WASTEWATER TREATMENT PLANT
UPGRADE PROJECT HEADWORKS EXPANSION
HAZARDOUS AREAS DESIGNATIONS

FOR
W.O.

SHEET NO. 60
E-10
OF ___ SHTS.
FILE NO.

Z:\BEAUMONT\WWTP Exp Ph II-IV (05-00900)\0.12 Bt WWTP Headworks Upgrades Bypass\dwg\# 60 E-10 HAZARDOUS AREA.dwg E-10 hazardous area 9/26/2012 9:15:32 AM 1:2.11628